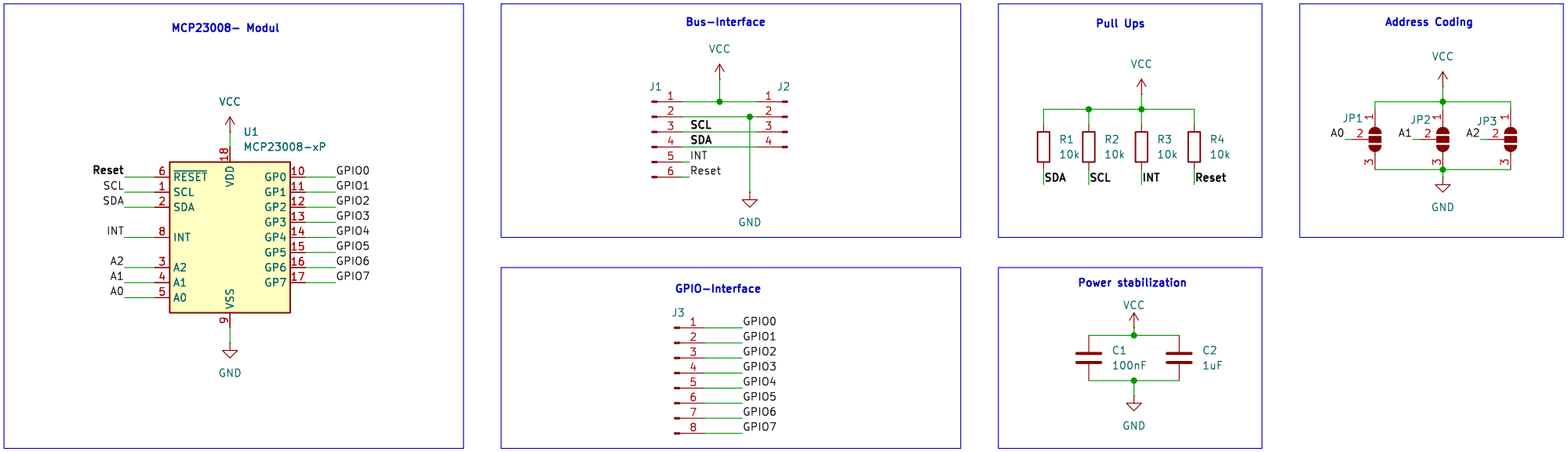

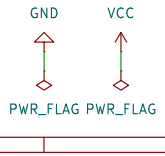

Häfele Services

Sheet: /
File: MCP23008_SOIC.kicad_sch

Title: MCP23008_Board

Size: A4	Date: 2024-11-05	**Rev: v1**
KiCad E.D.A. 9.0.7		Id: 1/1